Wind turbine generator

Owner’s Manual

Installation Operation Maintenan

CE & TUV

One Important Safety Instructions

READ THESE INSTRUCTIONS BEFORE ASSEMBLING,INSTAKKING OR OPERATING YOUR PRODUCT.

1. SAVE THESE INSTRUCTIONS. This manual contains important instructions that must be followed during assembly, installation and maintenance.

2. Read, understand and respect all warnings.

3. Do not install wind turbine on a windy day.

4. If unusual noise or operation is experienced, turn off machine and contact authorized service personal.

5. During assembly and installation properly torque all fasteners.

6. Use only proper grounding techniques as established by the NEC.

7. Wind turbine codes. Failure to comply with manual and local codes may affect and possibly void your warranty.

8. Rotating blades are a serious mechanical hazard. Install wind turbine so no one can come into contact with blades.

FA1.2 series Technical Specifications

Model	DF-200	DF-300	DF-400
Rated Power(W)	200	300	400
Rotor Voltage(V)	12/24	12/24	12/24
Rotor diameter(M)	1.2	1.2	1.2
Star up wind speed(M/S)	2	2	2
Body	Cast aluminum		
Blades	3-Carbon fiber composite/3-composite material		3-Carbon fiber composite

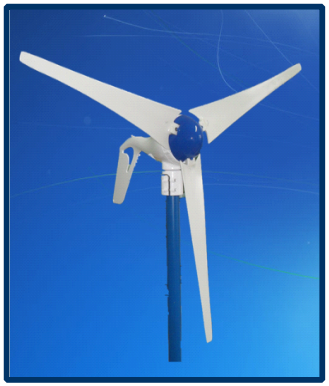

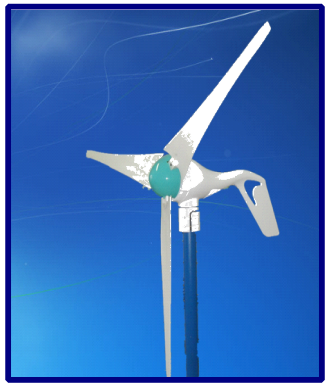


Warning:Don't attempt to mount the turbine while blades are spinning

Turbine Assembly

Your wind turbine delivered partially assembled. Assembly requires mounting the blades on the blade hub, securing the hub to the turbine body and installing the nose cone on the blade hub. The necessary hex wrenches are furnished with FA1.2 Series.

If the wind turbine is to be installed after the tower is erected, it will be safer and easier to first install the turbine body on the tower and then install the hub/ blade assembly. This will avoid attempting to mount the turbine while the blades are spinning-a dangerous condition.

Pass a bolt through the blade and screw it into the locknut-do not fully tighten the bolt yet. Install the second bolt and lock-nut and torque both to 7.45ft-Ibs(10Nm). Install the remaining two blades following the same procedure.

If the wind turbine is to be installed on a "tilt-up" tower, mount the blade/hub assembly to the turbine now. Start the M16 hub nut on shaft thread and "spin" the hub completely onto the turbine alternator shaft. Fully tighten the hub to 48 ft-Ibs (65Nm) by inserting a hex key wrench in the turbine alternator shaft and turning the shaft while turning the blades.

Mount the nosecone into position over the outside edges of the blade hub. Nose cone bolts, M4*10mm,3Ib-ft.

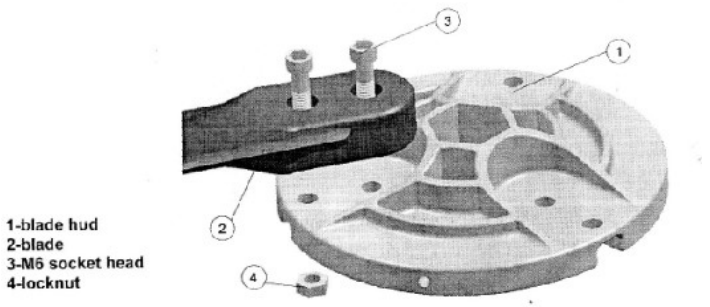

Fig. 1 blade attachment Detail.

Remarks: The output of wind turbine generator is DC(The red wire is anode ,the black wire is negative electrode, the blue wire is ground wire) The red wire and the black wire are connected with any two terminals of charging controller, there is no need to distinguish positive and negative. The ground wire is connected with screw of the tower foundation. Please refer to the following picture.

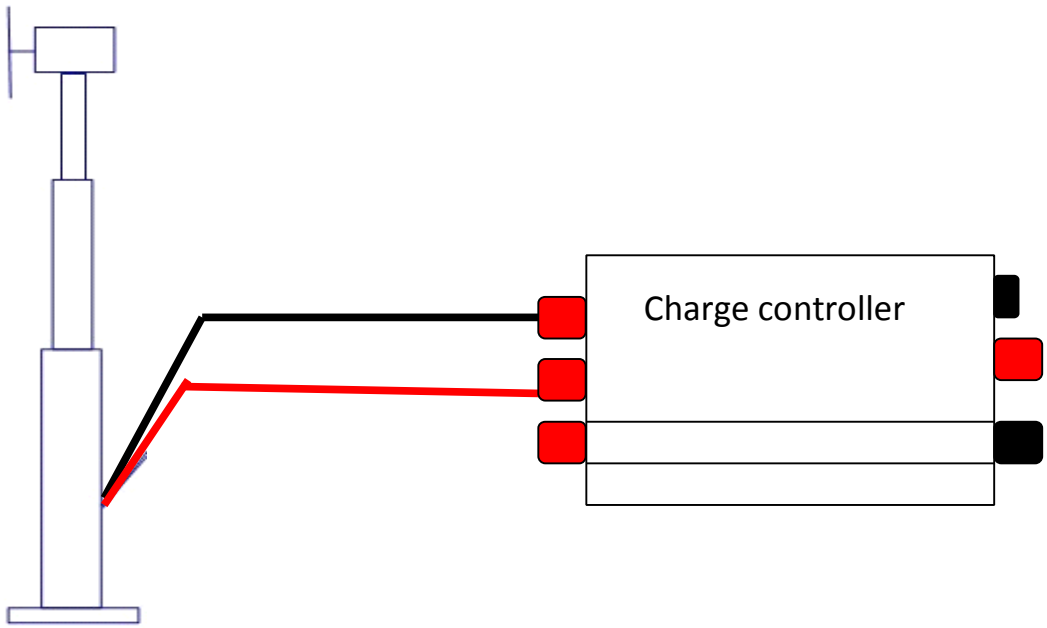

Wind Turbine Generator

Maintenance

Although your wind turbine has been designed to run for long periods without requiring any maintenance, reliability and performance will be enhanced if you periodically inspect your system.

CAUTION: Never approach the turbine during operation.

•After blades for chips or nicks. Replace blades if damaged. Do not operate the turbine with chipped or unbalanced blades. This can cause severe wear, damage, and possible failure. Do not install individual blades. The blades are balanced as sets.

·Check the blade bolts and the hub but for tightness.

·Check nosecone for cracks and proper fit.

·Wash off any built-up dirt or debris from the blades.

·Check all electrical connections to make sure they are tight and free from corrosion.

·As with all charging systems, check your battery water levels and add distilled water in accordance with manufacture's recommendation.

·We suggest replacing the blades and bearing every five years for optimal performance.

Exploded view & parts list

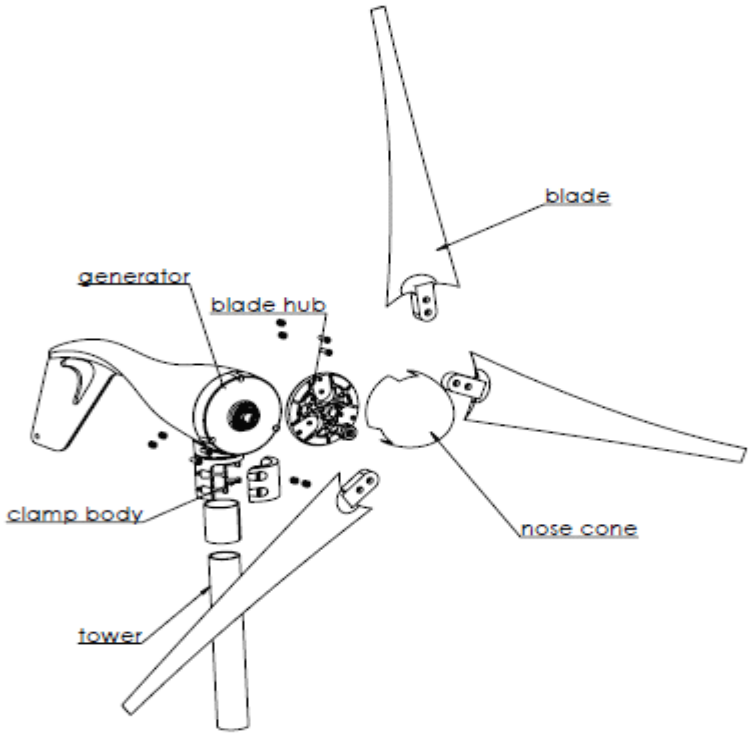

Item	Description	Qty
1	Nose cone	1
2	Blade	3
3	Blade hub	1
4	Nacelle body ass'y	1
5	Clamp body	1
6	tower	1