ENGLISH

Solar Frontier Europe GmbH

Installation and Maintenance Manual

SF140-S / SF145-S / SF150-S / SF155-S / SF160-S / SF165-S / SF170-S

Content

1. About this Manual **4**

2. General Information **4**

3. Technical Data **4**

3.1 Electrical Characteristics 4

3.2 Module Performance at Low Irradiance 5

3.3 Thermal Characteristics 5

3.4 Characteristics for System Design 5

3.5 Mechanical Data 5

3.6 Module Drawing 6

4. Safety **7**

4.1 General Safety 7

5. Storage and Transport **7**

6. Mechanical Installation **8**

6.1 Mechanical Installation Cautions 8

6.2 Site Location 8

6.3 Module Handling Instructions 8

6.4 Module Mounting Instructions 9

7. Electrical Installation **13**

7.1 Electrical Wiring Safety Precautions 13

7.2 Grounding 13

7.3 Electrical Wiring 14

8. Operation **15**

9. Maintenance **15**

10. Disposal **15**

Disclaimer

This manual is the proprietary information of Solar Frontier (SF). SF's Limited Warranty Certificate for PV modules will be voided if the instructions here within are not strictly observed. SF will not assume any liability for damage arising from improper use, wrong assembly, operation and maintenance. Solar Frontier reserves the right to make amendments to the contents of this document without prior notice. This conforms to certification as set out by IEC (61646/ 61730-1/2) and UL (1703).

This manual is valid from August 2013. It replaces all previous changes made to this document.

1. About this Manual

Thank you for choosing Solar Frontier's (SF) CIS photovoltaic (PV) modules. At Solar Frontier, we look forward to providing you the highest standards in solar energy performance and customer service.

The following manual contains vital information on handling, installing, wiring, operating and maintaining SF modules, and the associated risks. It is essential that you thoroughly understand all the instructions and warnings in this document, together with any information provided by balance of system manufacturers, to ensure the correct and safe use of our modules.
Please share this manual with the installer/operator and keep it for future reference. BE SURE TO CONFORM TO ALL RELEVANT LOCAL AND NATIONAL LAWS, REGULATIONS AND CODES WHEN INSTALLING, WIRING, OPERATING AND MAINTAINING SF MODULES.
For additional queries, please contact your local supplier or Solar Frontier.

2. General Information

Solar Frontier's CIS modules generate an electrical direct current when exposed to sunlight. They are designed for terrestrial use. The nominal power of SF modules indicates the power generated under Standard Test Conditions (module temperature: 25 °C, air mass 1.5, solar irradiance 1.000 W/m²). SF module power output in actual operating conditions may vary. The amount of electrical direct current generated by SF modules is proportional to irradiance intensity, while the voltage is affected by temperature.

3. Technical Data

The technical data below represents SF modules distributed in all regions.
Information required by UL is marked accordingly and is only relevant to US installers.

3.1 Electrical Characteristics

Electrical Data at Standard Test Conditions 25 °C, AM1.5, 1.000 W/m² (UL: per ASTM E892)

		SF140-S	SF145-S	SF150-S	SF155-S	SF160-S	SF165-S	SF170-S
Nominal power	Pmax	140 W	145 W	150 W	155 W	160 W	165 W	170 W
Power tolerance		+5 W / 0 W						
Open circuit voltage	Voc	107.0 V	107.0 V	108.0 V	109.0 V	110.0 V	110.0 V	112.0 V
Short circuit current	Isc	2.10 A	2.20 A	2.20 A	2.20 A	2.20 A	2.20 A	2.20 A
Voltage at nominal power	Vmpp	80.5 V	81.0 V	81.5 V	82.5 V	84.0 V	85.5 V	87.5 V
Current at nominal power	Impp	1.74 A	1.80 A	1.85 A	1.88 A	1.91 A	1.93 A	1.95 A
Open circuit voltage at -10 °C and 1,250 W/m² (UL)		120.0 V	120.0 V	121.0 V	122.0 V	123.0 V	123.0 V	125.0 V
Short circuit current at 75 °C and 1,250 W/m² (UL)		2.64 A	2.76 A	2.76 A	2.76 A	2.76 A	2.76 A	2.76 A

Photovoltaic modules may produce more current and/or voltage under actual operating conditions than in Standard Test Conditions. The electrical characteristics are within ±10 % of the indicated Isc and Voc values under STC. The power output stated on the label is measured at the plant after module preconditioning. The values of Isc and Voc marked on modules should be multiplied by a factor of 1.25 to determine component voltage ratings, conductor ampacities, overcurrent device ratings and size of controls connected to the module output.
UL: Refer to Section 690.8 of the National Electrical Code for an additional multiplying factor of 125 % (80 % derating). Installation must be completed in accordance with CSA C22.1, Safety Standard for Electrical Installations, Canadian Electrical Code, Part 1.

Electrical Data at Nominal Operating Cell Temperature Conditions (NOCT 47 °C)

		SF140-S	SF145-S	SF150-S	SF155-S	SF160-S	SF165-S	SF170-S
Nominal power	Pmax	104 W	108 W	111 W	115 W	119 W	123 W	126 W
Open circuit voltage	Voc	97.4 V	97.4 V	98.3 V	99.2 V	100.0 V	100.0 V	102.0 V
Short circuit current	Isc	1.68 A	1.76 A	1.76 A	1.76 A	1.76 A	1.76 A	1.76 A
Voltage at nominal power	Vmpp	75.5 V	76.0 V	76.4 V	77.4 V	78.8 V	80.2 V	82.1 V
Current at nominal power	Impp	1.38 A	1.43 A	1.47 A	1.49 A	1.51 A	1.53 A	1.55 A

3.2 Module Performance at Low Irradiance

Efficiency reduction of maximum output from an irradiance of 1,000 W/m² to 200 W/m² at 25 °C is typically 2.0 %.
The standard deviation for the reduction in efficiency is 1.9 %.

3.3 Thermal Characteristics

NOCT		47 °C
Temperature coefficient of Isc	α	+0.01 %/K
Temperature coefficient of Voc	β	-0.30 %/K
Temperature coefficient of Pmax	δ	-0.31 %/K

3.4 Characteristics for System Design

Maximum system voltage	Vsys	1,000 V DC (UL 600 V DC)
Limiting reverse current	Ir	7 A
Maximum series fuse rating	Isf	4 A

- The sum of Voc for modules in series must not exceed the maximum system voltage of the module under any condition. This includes also low temperature conditions.
- Reverse current applied to the modules should not exceed 7 A under any circumstances.

UL: Modules installed in parallel will be provided with the listed maximum series fuse, as specified.

3.5 Mechanical Data

Dimensions (L x W x H)	1,257 x 977 x 35 mm (49.5 x 38.5 x 1.4 in)
Weight	20.0 kg (44.1 lbs) / 16.3 kg/m² (3.3 lbs/ft²)
Module operating temperature	-40 °C to 85 °C
Application class on IEC61730	Class A
Fire safety class on IEC61730*1	Class C
Cable	2.5 mm² / AWG14 (halogen free)
Snow load (to the front of the module)*2	2,400 Pa (IEC61646) / 1,600 Pa design load (UL1703)
Wind load (to the back of the module)	2,400 Pa (IEC61646) / 1,600 Pa design load (UL1703)

*1 UL: The fire rating of this module is valid only when mounted in the manner specified in the mechanical mounting instructions.
*2 UL: The load applied to a module under UL testing conditions is 1.5 times greater than the module's design load. Accordingly, 2,400 Pa (50 lbs/ft²) is loaded to test the 1,600 Pa (33.4 lbs/ft²)UL design load .

3.6 Module Drawing

Please refer to the diagram below to identify module parts.

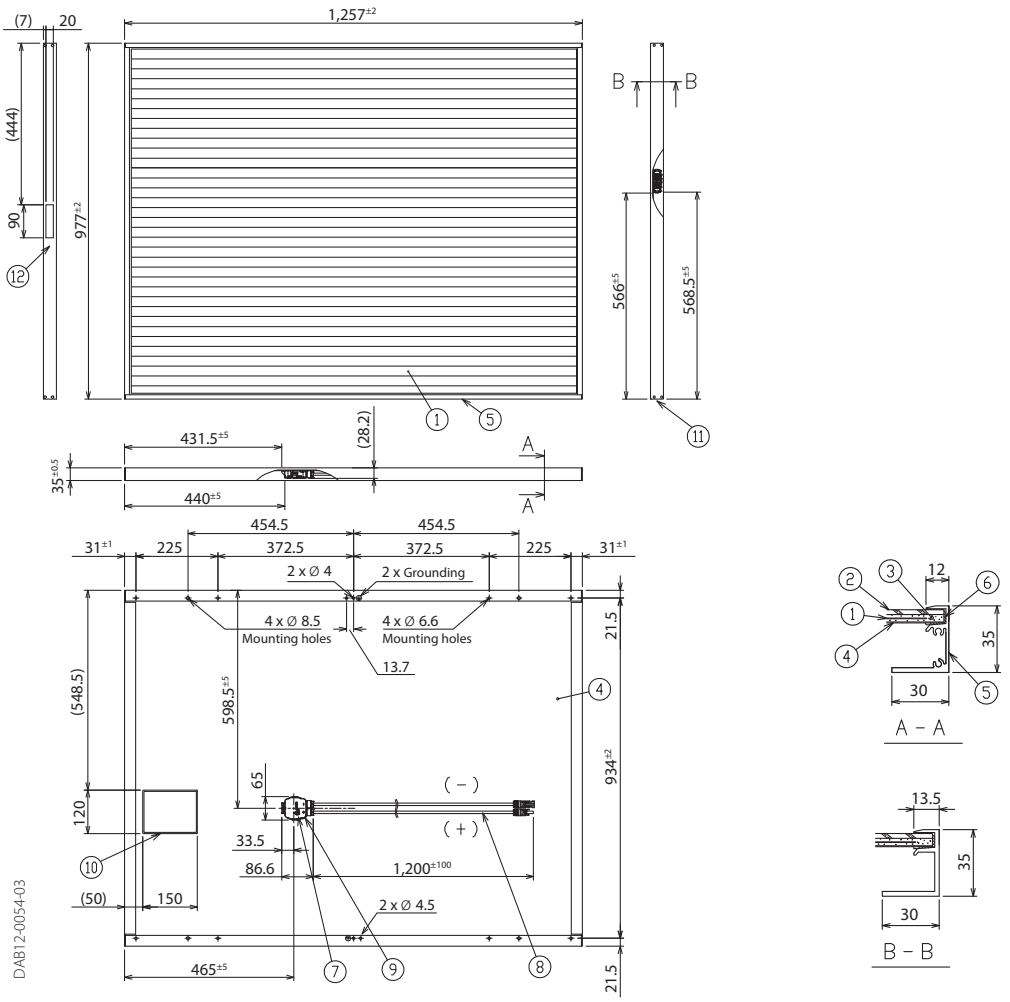

No.	Item	QT'Y	Description
1	Cell	1	CIS (Substrate glass)
2	Cover glass	1	Clear tempered glass
3	Encapsulant		EVA
4	Back sheet		Weatherproof plastic film / Color: black and silver
5	Frame	1 Set	Anodized aluminium alloy / Color: black
6	Edge sealant		Butyl rubber
7	Junction box	1	With bypass diode
8	Cable		2.5 mm^2 / AWG14 (with waterproof and locking connector MC4 compatible)
9	Adhesive		Silicone
10	Label	1	Product label
11	Screw	8	Stainless tapping (SUS304J3)
12	Bar code label	1	Serial number

4. Safety

Please ensure all necessary measures are taken to prevent accidents. The use of SF modules in applications that may endanger human lives is prohibited, including in air and road transport systems. SF modules must not be used for anything other than their expressed purpose.
Solar Frontier strongly advises you to follow the instructions below in order to avoid bodily injury, damage to property and/or death.

4.1 General Safety

- Installation, wiring, and maintenance of SF modules must only be carried out by licensed and trained persons.
- Ensure that all instructions and information related to SF modules and other balance of system components are fully understood prior to handling and installing a PV solar system.
- Wear appropriate protection and take all necessary precautions to prevent electric shock, especially when DC voltage exceeds 30 VDC.
- The front surface of SF modules shall be covered with an opaque material during installation to decrease the potential of electrical shock.
- SF modules only generate direct current (DC) electricity.
- SF modules do not have the ability to store electricity.
- SF modules will experience higher voltage when connected in series and higher electrical current when connected in parallel.
- Only interconnect SF modules with similar electrical characteristic in series or in parallel to prevent system imbalance conditions and module damage.
- The PV array open-circuit voltage must never exceed the maximum system voltage (including in low temperature conditions).
- Leakage currents could create a shock hazard or fire.
- Do not disconnect operational modules or electrical arcing may occur. This may result in serious bodily harm or death.
- Do not use SF modules for purposes other than terrestrial power generation to prevent electrical shock, fire or other accidents.
- Do not artificially concentrate sunlight on modules using lenses or mirrors.
- Do not use any light sources other than natural sunlight and general illumination for power generation
- Do not use SF modules in water or liquid. There is a serious risk of electric shock, an electric leak or an accident.
- The level of leakage current must be limited in accordance with local regulations for safety reasons.
- Carefully check the polarity of the wiring before installing. Incorrect wiring may damage SF modules or appliances.
- Only use equipment, connectors, wiring and support frames suitable for solar electric systems.

5. Storage and Transport

Please follow the instructions on the module packaging when storing and transporting SF modules. Ensure that each module is adequately supported and always stored in dry conditions. The module packaging is not waterproof material. Keep the wiring box (junction box) and the module connector away from any liquids when storing and transporting SF modules. SF modules should be kept in the original packaging until final installation. Small amounts of white powder from packaging material may adhere to the modules. This may safely be ignored and has no affect on performance.

6. Mechanical Installation

6.1 Mechanical Installation Cautions

- Observe all applicable health and safety regulations when installing SF modules.
- A safe distance should be cordoned off around the installation area.
- Fall protection equipment must be used.
- Installation in windy or wet conditions may require additional precaution. Please follow your local safety regulation.
- Keep the junction box and the module connector away from any liquids until connectors are mated.
  Failure to do this may cause faulty wiring.
- Keep SF modules out of reach of children.

6.2 Site Location

- Ensure that the maximum wind and snow loads in local conditions do not exceed the SF module maximum load ratings.
- Avoid to install SF modules in areas where they are exposed to oil vapor and /or corrosive gas.
- Avoid accumulation of grit or dust on the SF modules as it may influence the output yield.
- Do not expose SF modules to sulphurous atmospheres.
- Do not install SF modules in locations where flammable gases accumulate or flow as there is a risk of sparks from SF modules.
- Do not install SF modules near fire.
- Avoid installing SF modules in locations where they may be covered by permanent shadows. This may adversely affect their performance.
- Do not install SF modules in locations where temperatures exceed the temperature range indicated in the module's technical specifications.

6.3 Module Handling Instructions

- Do not disassemble or modify SF modules. This may result in an electric shock, fire or other accidents. Solar Frontier cannot be held responsible for any loss or damage caused by unauthorized disassembling, modification or misuse of SF modules.
- Do not drill additional mounting holes into the aluminum frame. Only pre-drilled holes should be used.
- Avoid placing any stress onto the SF modules, cables or connectors.
  (Minimum bending radius of 39 mm for module cables is recommended)
- Do not stand or step on SF modules. This may result in damage to the module and/ or bodily harm by falling.
- Do not drop SF modules or drop objects onto them. Both sides of the module (the glass surface and the back sheet) are fragile.
- Do not strike the terminal box or pull the cables. The terminal box can crack and break, while the output cable may unplug and cause electricity leakage or an electric shock.
- Do not scratch the backsheet or cables of the SF modules. Rubbing or scratching may result in an electric shock, electric leakage or an accident.
- Do not scratch the insulation coating of the frame (except for the grounding connection). This may weaken the strength of the frame or cause corrosion.
- Do not cover the water drain holes of the frame. Doing so may cause frost damage.
- Do not use glue when closing the cover of the junction box. Similarly, do not use a sealant to bond the junction box lid to its base.

6.4 Module Mounting Instructions

Mounting Structures Cautions

- Pay attention to the electrochemical series when selecting support structure material to avoid galvanic corrosion.
- Fasten and lock bolts completely. Inadequate mounting may result in SF modules falling or other accidents.
- Ensure that the SF modules are securely fastened to the mounting support structure that is durable, made of corrosive and UV resistant material, and follow the applicable local and civil codes.
- Ensure, that your mounting support structure is designed to withstand the SF modules design snow and wind loads applicable for your chosen site. Solar Frontier will not be responsible if the SF modules are damaged due to the durability of the mounting support structure. Consult your mounting structure manufacturer for an appropriate mounting design.

Mounting the Solar Modules

- PV modules should typically face South in the Northern Hemisphere and North in the Southern Hemisphere for optimal power production.
- Modules can be installed horizontally (landscape) or vertically (portrait).
- Maintain a space between SF modules and the roof. This will allow air to circulate, cooling the module, and allowing condensation to dissipate. Solar Frontier recommends a distance of at least 100 mm.

Mounting with Screws

SF modules should be fastened to the support structure using the mounting holes on the frame. The support structure should be securely fastened to a non-corrosive roof. Tighten the screws with an adequate torque value. Please refer to further instructions and adequate torque value provided by the screw manufacturer.

Mounting with Inner Holes

Each module will require four M6 (or 1/4 in) bolts with washers, lock washers and nuts. Tighten the screws with an adequate torque value.

UL: Recommended tightening torque is 8 Nm (70.8 lb in) minimum.

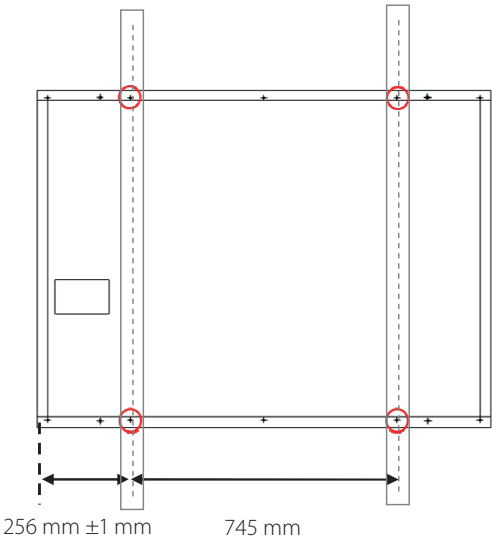

Landscape (horizontal)

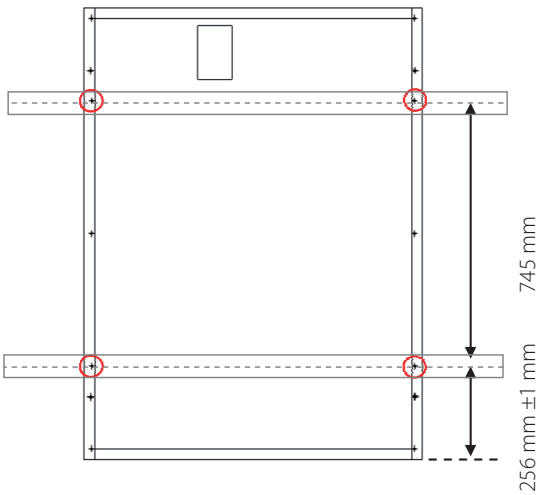

Portrait (vertical)

TUV: 2,400 Pa (50 lbs/ft²) to the front and back of the module

UL: 1,600 Pa (33.4 lbs/ft²) to the front and back of the module

1.5 times the design load is applied to the module during UL testing. 2,400 Pa (50 lbs/ft²) is applied to test 1,600 Pa (33.4 lbs/ft²) UL design load.

Mounting with Outer Holes

Each module will require four M8 (or 5/16 in) bolts with washers, lock washers and nuts. Tighten the screws with an adequate torque value.

UL: Recommended tightening torque is 15 Nm (132.8 lb in) minimum.

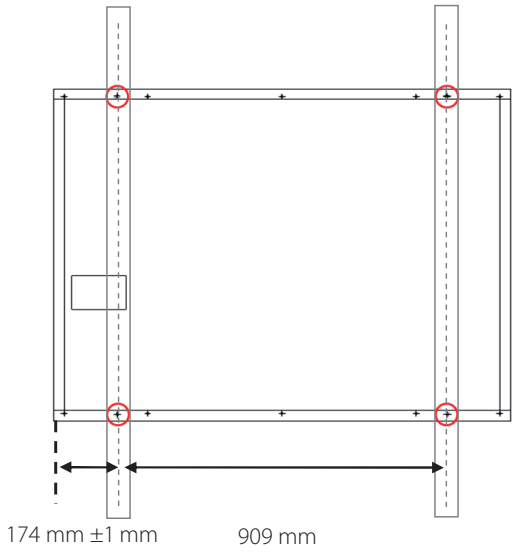

Landscape (horizontal)

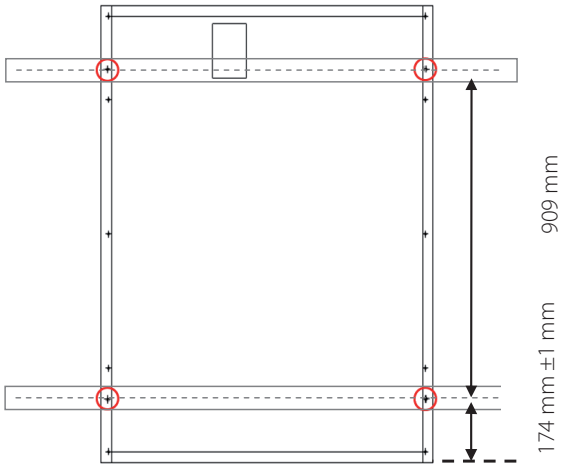

Portrait (vertical)

TUV: 2,400 Pa (50 lbs/ft²) to the front and back of the module

UL: 1,600 Pa (33.4 lbs/ft²) to the front and back of the module

1.5 times the design load is applied to the module during UL testing. 2,400 Pa (50 lbs/ft²) is applied to test 1,600 Pa (33.4 lbs/ft²) UL design load.

Please refer to further instructions and adequate torque value provided by the screw manufacturer.

Mounting with Clamps

Four or more corrosion-proof aluminum clamps should be used to fasten SF modules to the support structure. Center-line of the clamps shall be secured within at the indicated clamping zone (256 mm ± 75 mm) from the corners of the longer side of the module frame using stainless-steel M8 bolts with a minimum length of 20 mm. Tighten the clamps with an adequate torque value. *[1]
All selected module clamps must be at least 50 mm long, 3 mm thick, and overlap the module frame by 8 mm or more.

Clamps must not create shadow nor cover the front glass, and shall not deform the module frames during installation. Please refer to the instructions provided by the clamp manufacturer for further instructions.

*[1] **UL:** Recommended tightening torque is 15 Nm (132.8 lb in) minimum.

TUV: 2,400 Pa (50 lbs/ft2) to the front and back of the module
UL: 1,600 Pa (33.4 lbs/ft2) to the front and back of the module
1.5 times the design load is applied to the module during UL testing. 2,400 Pa (50 lbs/ft2) is applied to test 1,600 Pa (33.4 lbs/ft2) UL design load.

Module perpendicular to support rails

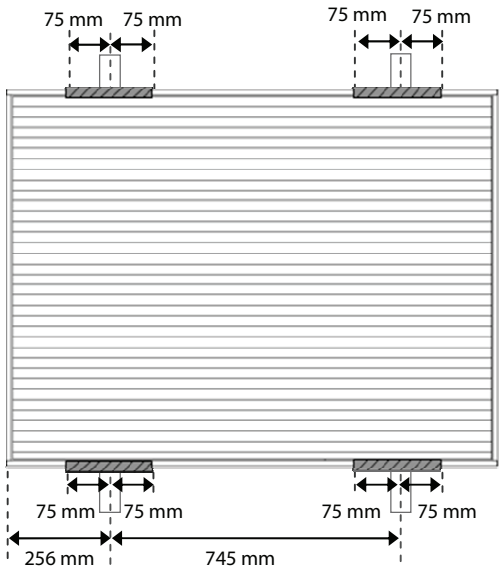

Landscape (horizontal)

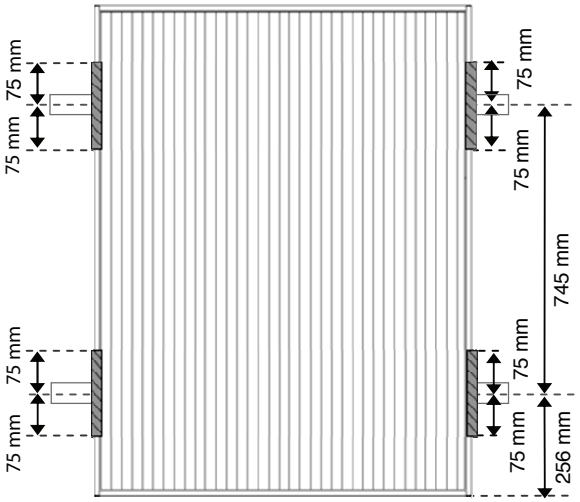

Portrait (vertical)

Array Installation (section)

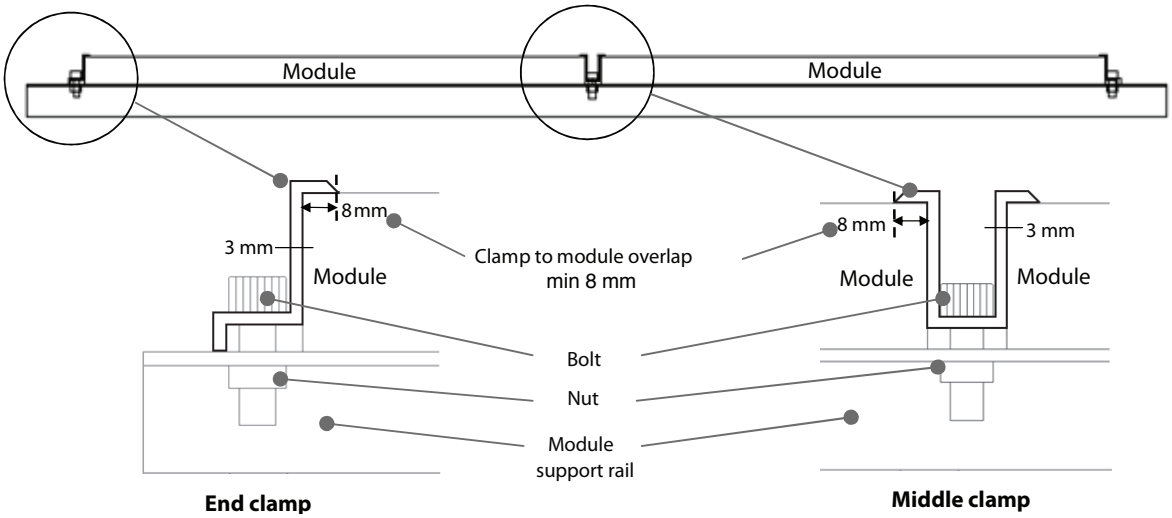

End clamp **Middle clamp**

Module parallel to support rails

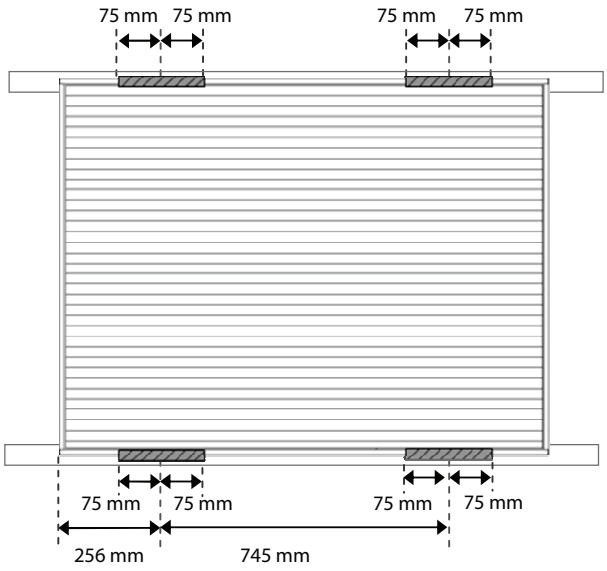

Landscape (horizontal)

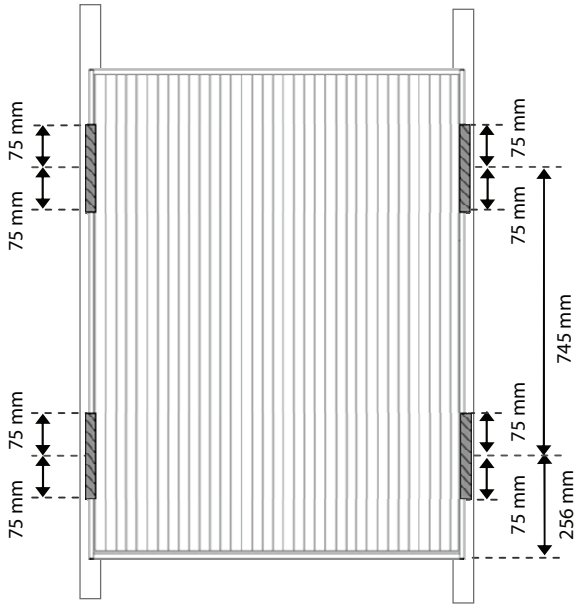

Portrait (vertical)

Array installation (section)

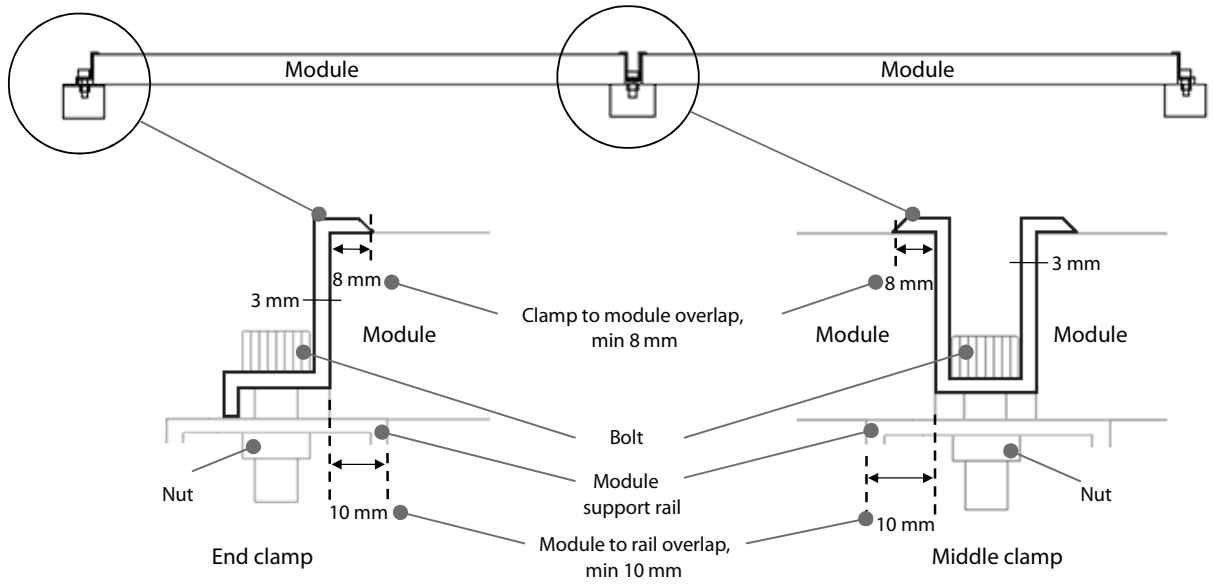

For alternative mounting methods, please consult Solar Frontier.

7. Electrical Installation

7.1 Electrical Wiring Safety Precautions

- The sum of Voc of modules in series must not exceed the maximum system voltage of the module under any condition. Reverse current applied to the modules must not exceed 7 A.
- Do not touch or handle the PV module, terminal box or the end of output cables with bare hands.
- Do not carry out installation when PV modules, installation tools or installation area are exposed to water.
- Ensure that the connection parts between SF modules and power receiving devices are isolated and waterproof. Using SF modules with insufficient isolation and waterproofing could result in an electric shock, an electric leak or an accident.
- Keep the wiring box (junction box) and the module connector away from any liquids until connectors are mated. Failure to do this may cause faulty wiring.
- Components interconnecting the modules must be compatible with the connectors, and must provide system operation and fault protection.
- Inverters must meet the technical requirements of SF modules.
- Do not connect the PV modules directly to loads such as motors. Variation in output power may damage the motor.
- Observe and understand the safety instructions of batteries. Their misuse can result in serious bodily harm due to high electrical current.
- Cables should be adequately protected from damage by wildlife.

7.2 Grounding

Grounding cautions

- Be aware of the necessary grounding requirements prior to installation. Your local authorities can help you further.
- Install arrestors, surge absorbers or any other appropriate lightning protection tools as needed.
- Module frames, mountings, connection boxes and metal conduits should be connected to an earth ground as lightning protection, in accordance with local, regional and national standards and regulations.
- Grounding holes (ø 4 mm) on the aluminum frame of the SF modules are provided to accommodate grounding. Use a grounding wire made of copper, not smaller than 2 mm^2 (AWG14). Temperature rating of the conductors must be between -40 °C to 85 °C. Ensure that the crimping terminal is tightly tied to the module frame with a rolling thread screw and a lock washer to ensure electrical contact.
- Grounding devices such as module clamps with an integrated grounding pin, serrated washers, grounding clips or lugs, designed for bonding photovoltaic modules to the mounting structures may also be used for grounding as described in NEC Section 250. These grounding devices shall be made in conformance with the grounding device manufacturer instructions. Consult the grounding device manufacturer to identify the appropriate grounding and bonding device for your mounting structure or design.

For alternative grounding methods please consult Solar Frontier.

UL: The module with exposed conductive parts is considered to be in compliance with UL1703 only when it is electrically grounded in accordance with the instructions presented below and the requirements of the NEC.

Earth by connecting from ⏚ to earth.

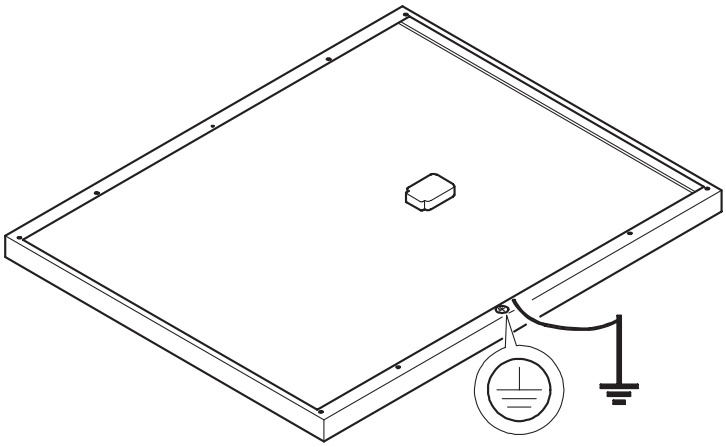

Grounding (IEC)

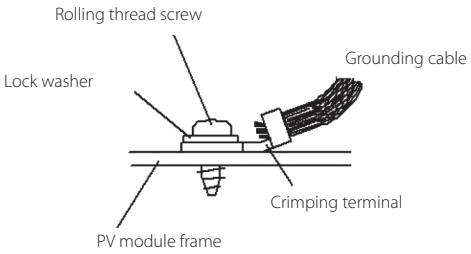

Grounding with washer (UL)

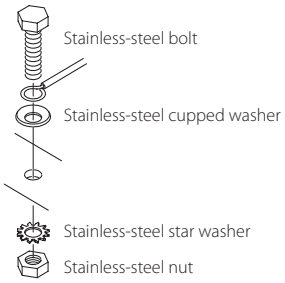

Use M4 bolt (torque value 1.5 Nm) or standard gauge size #6 bolt (torque value 1.0 Nm). Tighten the bolts or screw with an adequate torque value. Please refer to further instructions provided by the screw or bolt manufacturer.
UL: Recommended tightening torque is 1.5 Nm and 1.0 Nm minimum for M4 and standard size #6 bolt respectively.

7.3 Electrical wiring

- A set of cables with a plastic connector for each polarity is supplied with SF modules. Use these to connect modules.
- Do not open the junction box.
- Fasten the module cable to the frame or to the mounting system in order to avoid any stress to the connector.
- Cables drooping from the terminal box are hazardous and must be avoided.
- Cables should be secured so they are not exposed to direct sunlight (such as behind the module).
- The sum of Voc of modules in series must not exceed the maximum system voltage rating of the module under any condition, even at low temperature.
- Reverse current applied to the modules should not exceed 7 A under any condition.
- Minimum cable diameter: 2.5 mm^2.

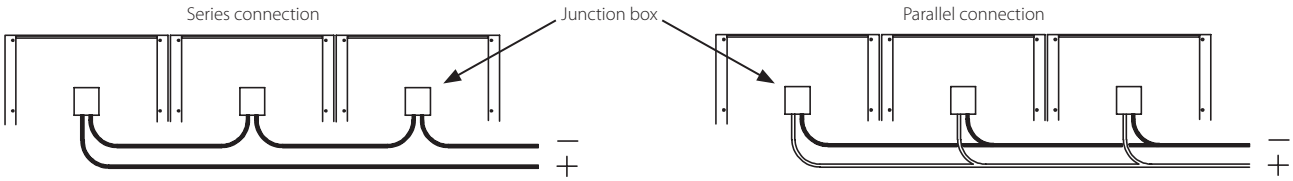

Carry out installation and wiring work in compliance with all relevant health, safety and environment laws and regulations.

8. Operation

- Prior to connecting the PV system to the grid, make sure the entire system has been checked, tested and approved in accordance with the applicable regulations.
- Depending on local regulations and utility policies, connection to the grid and start up of the PV system may only be performed by authorized personnel.

9. Maintenance

A monthly visual check is highly recommended in order to maintain the efficiency of SF modules and the security of the mounting.

- Remove any dirt, fallen leaves or bird droppings from the surface, and check that there is no damage to the surface. Do not use detergent or chemicals for cleaning dirt off SF modules as it may damage the modules and result in degradation of insulation.
- Do not use hard brushes or any other hard materials; use only soft cloths or sponges for removing dirt from the SF modules surface.
- When replacement parts are required, be sure the installer/servicer uses parts specified by the manufacturer with the same characteristics as the original parts. Unauthorized substitutions may result in fire, electric shock, or other hazard.
- Stop using SF modules when any damage or unusual phenomena are observed. Have them immediately replaced or removed by a qualified technician.

10. Disposal

SF modules must be disposed of in a responsible manner. Please contact your local supplier or disposal company for further information. For health and safety reasons, SF modules should not be disposed of with household garbage, and must be dealt with in accordance with local codes and regulations.

Solar Frontier is a member of PV Cycle, marking its commitment to the environment and public safety.
PV Cycle's initiatives can be found at: http://www.pvcycle.org/

Europe

Solar Frontier Europe GmbH
Bavariafilmplatz 8
82031 Grünwald bei München
Germany

Tel: +49 89 92 86 142 0

Italy

Solar Frontier Europe GmbH
Sede Secondaria per l'Italia
Via Domenico Cotugno 49/A scala B
70124 Bari
Italy

Tel. +39 080 89 66 984

Asia (HQ)

Solar Frontier K.K.
Daiba Frontier Building
2-3-2 Daiba, Minato-ku
Tokio 135-8074
Japan

Tel: +81 3 5531 5626

Middle East

Solar Frontier K.K.
Technical & Scientific Office
Eastern Cement Tower, #306
King Fahd Road
Al Khobar
Kingdom of Saudi Arabia
Tel: +966 3882 0260

Americas

Solar Frontier Americas Inc.
3945 Freedom Circle
Santa Clara, CA 95054
USA

Tel: +1 408 916 4150

© Solar Frontier Europe GmbH

www.solar-frontier.com
www.solar-frontier.eu

IMS1-38-PEE44